215 Vineyard Court, Morgan Hill, CA 95037
PHONE (408) 778-4200 FAX (408) 778-4300
Website: MarkiMicrowave.com

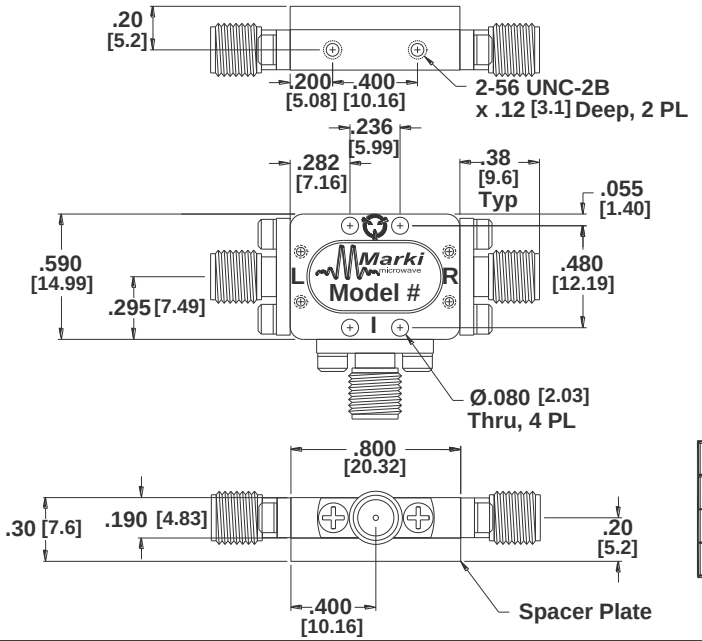

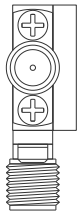

Port	Connector	Models >26.5 GHz
LO	SMA Female	2.92 mm Female
RF	SMA Female	2.92 mm Female
IF	SMA Female	SMA Female

Weight: 15 grams typ

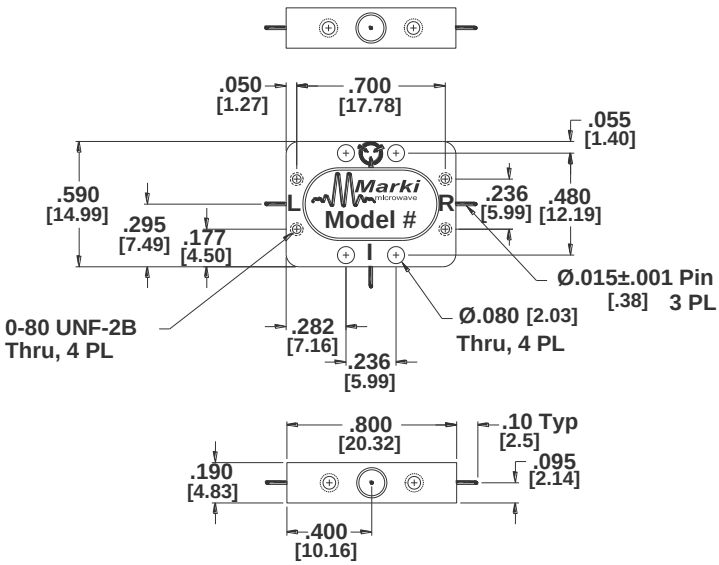

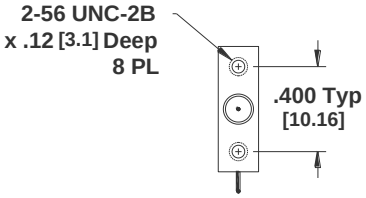

Weight: 8 grams typ

A-Style Mixer Outline

Projection

Inch
[mm]

XXX=±.005
XX=±.02

5/17/10